ADVANCED MOTORTECH LLC
5237 PARK STREET NORTH
SAINT PETERSBURG FL 33709-1011 USA
ADVANCED MOTORTECH.COM
727-412-8200 ♦ SALES@ADVANCEDMOTORTECH.COM

Includes Book!
Electric Motor Maintenance and Troubleshooting by Augie Hand

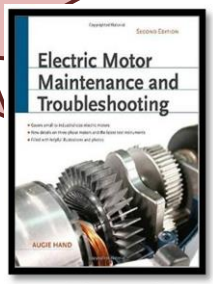

ELECTRIC MOTOR TECHNOLOGY FOR NON-ENGINEERS

Join Us LIVE, ON-LINE: December 2-3-4, 2020

Live Interactive Classroom experience broadcast from Clearwater FL

Learn practical understanding & essential concepts of electrical motor technology from the experts.
The only course of this kind available anywhere:

- **Types of Motors, Similarities & Differences of Motors**
- **Key Electric Motor Terminology, Nameplate Data Meaning**
- **Basic Electric, Magnetic & Mechanical Operating Principles**
- **Functions of the Parts, What is Important & Why**
- **Motor User View of Motors & Selection Choices**
- **Realistic Energy Efficiency & Motor Economics**
- **Key Issues of Manufacturing, Installing, & Operating**

Objectives and Benefits:

This course provides a foundation of technical and practical principles used for electric motor design, construction and operation. The focus is on topics important to sales, customer service, and business coordination of those involved with electric motors. The intended audience is non-engineers, or engineers not familiar with electric motors, who routinely work with providing or using electric motors.

The purpose of this one-of-a-kind course is to present a solid understanding of the characteristics of electric motors to support activities important to sales persons, customer service staff, OEM manufacturers, purchasers, and users of electric motors.

Your expert instructor will help you understand the technology of electric motors and then delve into the 'why' and 'what it means' of the many principles, design details, materials used, and end-user issues. Instruction assumes no prior formal technical education. This course regularly gets great compliments.

We use a real-world, common sense approach to help demonstrate how key choices in terms of performance, quality and value affect the motor delivered to the customer. Primary focus will be on fractional and integral horsepower NEMA-frame induction machines, and include both random-wound and form-wound configurations. Other motor types will be discussed to illustrate their unique features and benefits. Most of the material is on topics and issues common to all motors, as well as most generators.

Those who will benefit:

- **Motor Application Engineers, Sales Engineers, Distributor Staff**
- **Electrical Contractors & Motor Service Technicians**
- **Customer Service & Marketing Personnel at All Levels**
- **Engineers of All Types New to Electric Motors**
- **Suppliers to Motor Manufacturers**
- **Facility Engineers, Motor Users, & Purchasers of Electric Motors**

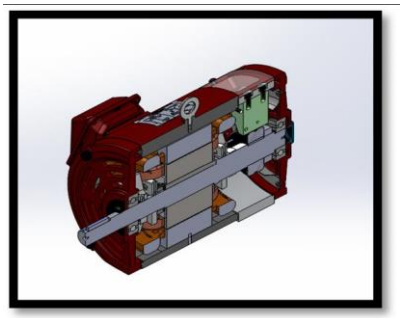

*** Course Schedule *(All times are Eastern Time Zone, USA)* ***

Day 1:

9:45-10:10 On-Line Entry; AV check
10:15 Sessions Begin

1. Fundamentals of Electric Motors
- ☑ Comparison of Motor Types
- ☑ Volts, Amps, Electromagnets
- ☑ Principle of Energy Conversion
- ☑ Meaning of Key Terminology
- ☑ Types of Motors, How They Differ
- ☑ Importance of NEMA MG1

2. Understanding Electric Power
- ☑ AC versus DC
- ☑ Single Phase versus Three Phases
- ☑ Why so Many Voltages?
- ☑ Wye versus Delta
- ☑ Series versus Parallel Circuits

3. Documentation & Info Delivered with Motors
- ☑ Nameplates & Connection Diagrams
- ☑ Box Labels: What is Important
- ☑ Installation & Operating Manuals
- ☑ Safety Issues
- ☑ Terminals Marking

4. Construction & Operation
- ☑ Proper & Jargon Terminology
- ☑ Functions of the Electrical Parts
- ☑ Functions of the Mechanical Parts
- ☑ Energy & Losses
- ☑ Thermal and Heat Issues
- ☑ How Motor Performance Data is Used

5. Motor Component Details – What is Important & Why
- ☑ Laminations
- ☑ Windings & Insulations
- ☑ Rotors & Armatures
- ☑ Housing & Enclosure
- ☑ Bearings & Shaft, Other

18:00 Session Ends

Please Note:

Daily schedule includes:
- Three AM & Three PM sessions, approximately 1 hour, each
- 10 minute breaks between sessions
- 30 minute Lunch Break
- Session breaks will not be coincident with topic breaks

Day 2:

9:45-10:10 On-Line Entry; AV check
10:15 Sessions Begin

6. How a Motor is Manufactured
- ☑ Punching & Stacking Laminations
- ☑ Winding Coils & Getting in the Slots
- ☑ Making the Shaft & Rotor
- ☑ Rotor Sub-Assembly
- ☑ Stator Sub-Assembly
- ☑ Assemble Complete Motor
- ☑ Testing & Finish

7. Motor Selection from the Customer Viewpoint
- ☑ What is the Application?
- ☑ Motor Specifications
- ☑ What are the Choices? Why?
- ☑ What the User 'Sees' Before Purchase
- ☑ What the User 'Sees' After Delivery

8. Energy Efficient Motors
- ☑ Motor Economics 101
- ☑ The Repair or Replace Decision
- ☑ What is Different?
- ☑ Standards for Motor Efficiency
- ☑ Evolution of Energy Efficient Motors
- ☑ New Legislation: It's the Law!
- ☑ On Testing for Motor Efficiency

9. Installation & Startup
- ☑ Important Mounting Features
- ☑ Alignment Issues
- ☑ Electrical Connections
- ☑ Shaft Attachments
- ☑ Check-Out, Running Tests

10. Adjustable Speed Drives
- ☑ Reasons to Use ASD's
- ☑ Basic Principles
- ☑ Effects on the Motor
- ☑ How ASD's are Selected
- ☑ Common Problems That Can Occur

18:00 Session Ends

Onsite training is now available! Send inquiries to sales@advancedmotortech.com

Day 3:

9:45-10:10 On-Line Entry; AV check
10:15 Sessions Begin

11. Common Failure Causes
- ☑ Bearings & Shaft
- ☑ Cooling System, Leads, Coils
- ☑ Environment, Contamination & Physical Damage
- ☑ Vibration, Balance, Mounting
- ☑ Installation Errors

12. Motors with Special Features
- ☑ Vertical Pumps
- ☑ Explosion Proof Rating
- ☑ Starting Options
- ☑ Submersible Motors
- ☑ Gearmotors
- ☑ Hoist Motors

13. Small Motor Overview – Principles, Functions, Parts
- ☑ Single Phase Induction Motors
- ☑ Multispeed Fan Motors
- ☑ Shaded Pole Motors
- ☑ Power Tool & Appliance Motors
- ☑ Servomotors

14. Large Motor Overview
- ☑ Above NEMA Frame Sizes
- ☑ Higher Voltages Than 480 VAC
- ☑ Fabricated Frame Design Issues
- ☑ Weather Proof Enclosures
- ☑ Cooling Systems, Top Hat

15. New Technologies & New Trends in Manufacturing
- ☑ Copper Rotor Cage
- ☑ Fractional Slot Winding
- ☑ Permanent Magnet Motors
- ☑ High Speed, Extreme Efficiency
- ☑ Axial Flux, Transverse Flux
- ☑ Motor Management Systems

16:00 Closing & Adjourn

Course content is subject to change. All issued material may not be covered.

Instructor:

Dr. Keith W. Klontz is President and CEO of Advanced MotorTech LLC, an engineering services company with emphasis on electric machine design. He holds BS & MS degrees in Electrical Engineering from the University of Illinois, Champaign-Urbana, and a PhD in Electrical Engineering from the University of Wisconsin-Madison. Dr. Klontz is a world-recognized expert and instructor in electric machine design and has over 50 years of hands-on experience with electric machine applications and design engineering, from concept to performance to repair and failure analysis. He has been involved in the research, development, prototyping, testing and training of very high performance machines from 5 Watts to 50 MW, with speeds ranging from angle positioning torque-motors to 90,000 rpm machines. Recent work includes design of extremely high efficiency PM and induction motors, very high power density machines, permanent magnet alternators, brushless d.c. traction motors, brush d.c. motors, and design for low cost

Registration Fee Include:

- ☑ Extensive 400+ page Training Manual (Full Color), materials shipped about 2-3 weeks before the course starts
- ☑ Access to the Live HD Broadcast, with two-way interaction capability
- ☑ Hardcover Book, "**Electric Motor Maintenance and Troubleshooting**" by Augie Hand
- ☑ Signed Certificate of Course Completion

Broadcast Information:

Hours: Live 9:45am to 18:15pm, Eastern Time Zone USA
Type: Classroom Setting; Live Instructor at Large-View Screen *(Not voice-over-slides)*
(Just like a live classroom, session recordings will not be available for later viewing)
Platform: Custom 1080p WEBEX; Entry Credentials with Password Required

To Attend This Course:

- **We will send a WEBEX Link and Entry credentials; please confirm receipt**
- **Recommended connection & bandwidth: Ethernet, 50MBs download** (5 MBs minimum); Wireless quality is not assured
- **Recommended viewing: 15 inch or larger monitor;** (1280 × 800 minimum**;** viewing ability, streaming quality, and compatibility with mobile devices, smaller screens and lower resolution, cannot be assured**)**
- **For now, we can accept only attendees located in: North America, UK/Europe, Japan, Korea, Australia, New Zealand**
  (Exceptions are not likely, but possible, on a case by-case only, at our sole discretion)

*Enrollment: ☐ Yes! Please enroll me in the 3-day course: Course ID: EMT–2012

Electric Motor Technology for Non-Engineers, Dec 2-3-4, 2020

Fee: $2125.00 for USA shipping address
$2325.00 for all International shipping addresses

Early Registration Fee†: $1975.00 for USA shipping address
$2175.00 for International shipping addresses

(We reserve the right to not enroll anyone, for any reason, at our sole discretion.)

Early Registration Discount!
Payment by Oct 15, 2020

Payment (USD$ only): *(Payment Deadline: Payment must be received 2 weeks before the course; Early Registration payment must be received by October15, 2020, no exceptions; †Invoiced and †PO payments not eligible for early discount)*

☐ MasterCard ☐ VISA ☐ AMEX

- Cardholder Name _____
- Card No. _____
- Exp ____/____ Billing Zip_____ Security Code: _____

☐ Check (payable **to Advanced MotorTech, LLC**); ☐ †Invoice me; ☐ †Purchase Order; *Subject to approved credit*.

Name _____Title _____

Company _____

Shipping Address _____

City _____ State _____Zip _____

Phone ( ) _____ Email_____

Unique Course! One-of-a-Kind in the World!

***By registering and attending for our course, you agree:**

(1) To provide us a verifiable address with this enrollment for trackable shipment of training materials
Sorry, a PO Box is not acceptable for this. Trackable delivery, without signature required, will be used
(2) To not allow any unpaid individuals to view any of the training content with intent to learn from our broadcast
(3) To screen-capture only handwritten white-board/flipchart writing, and visual samples shown.
(4) With exception of (3) screen-captures, to not allow any recording of the broadcast without permission in writing and prior payment of a recording fee. All training material and broadcast content is copyright protected.
(5) To not hold us responsible for poor connection, poor audio, or poor visual quality due to issues with your hardware, software, ISP, or facility. (*If in doubt, please contact us in advance for an Audio/Visual check*.)
(6) Cancellations made 15 days or more before the course starts AND BEFORE shipment of the training materials, are subject to a 15% cancellation fee.
Cancellations made 14 days or less before the course starts, OR AFTER shipment of training materials are subject to a 50% cancellation

Email: Training@AdvancedMotorTech.com **Phone:** (727) 412 - 8200
Mail: 5237 Park Street N, Saint Petersburg FL 33709 USA